EyeNovation®

Innovation im Auge

TORICA*Diff*-aA
MC 6125 T Diff

TORICA*Diff*-aAY
MC 6125 T Diff-Y

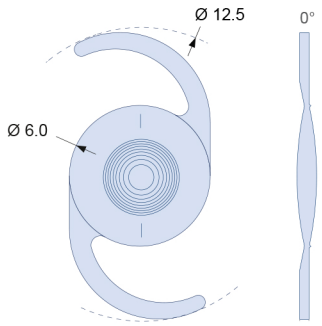

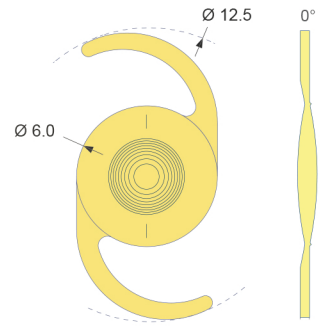

Type:	Foldable toric multifocal posterior chamber IOL, one-piece with C-loop haptics, Safeloader autoloading container optional
Material:	Hydrophilic acrylic with UV-Absorber, water content 26% at 35°C
Specifics:	Diffrative anterior surface, near additiom +3.5 D (at IOL plane), toric meridional aspheric posterior surface (aberration free*), posterior surface with 360° lens epithel cell barrier, blue light protection optional
Diopter Range:	10.0 to 30.0 D (biconvex) in 0.5 D steps
Cylinder Range:	1.0 bis 6.0 D in 0.5 D steps
Cylinder Axis:	The two thin diametrically opposed lines in the periphery of the optic indicate the axis of the plus-cylinder
Est. A-const:	118.4 (optical biometry)

* aberration = spherical aberration

Heidsieker Heide 90
33739 Bielefeld
tel: 05206 - 6031 - 0